Material:

1.PIN:Brass

2.Metal Tube:Brass

3.Dielectric:PBT

4.Plastic Handle:ABS

5.Back Suite:ABS

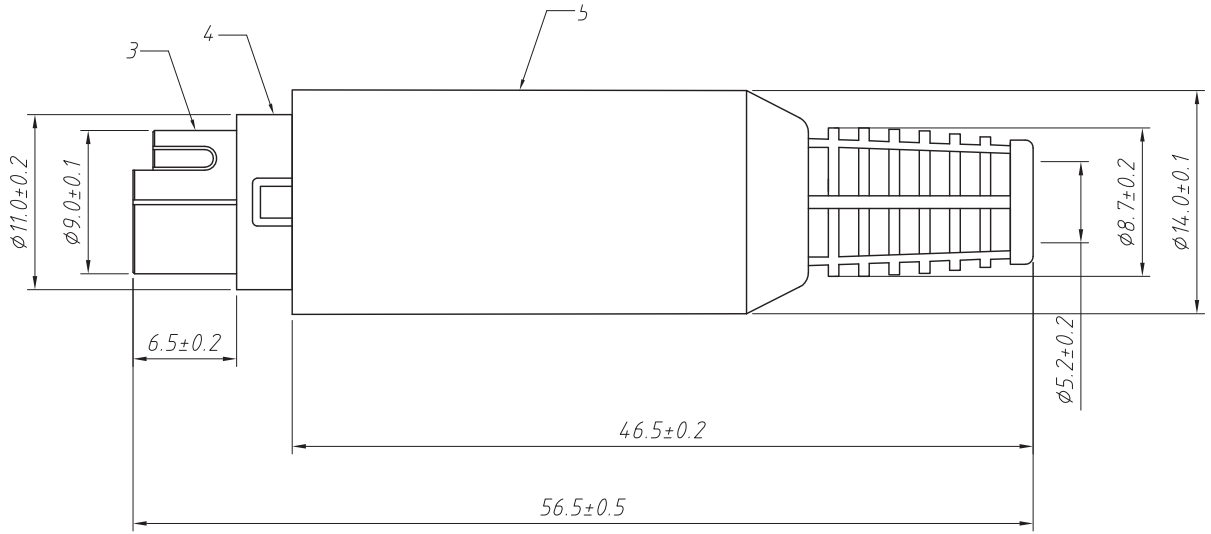

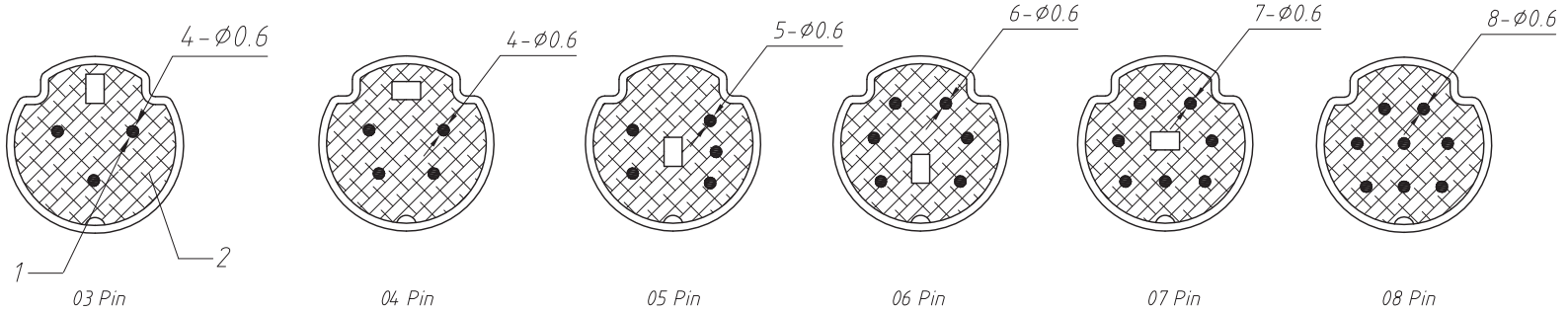

General description of ordering code

FAMILY		POLES	TYPE
MDP	-	**XX**	**VPNN**

euro-conn

RoHS Compliant Lead Free

UNITS: mm	SHEET SIZE: ISO A4	SCALE:	
> 0 ~ 3	> 3 ~ 18	> 18 ~ 50	> 50 ~ 120
± 0.12	± 0.15	± 0.3	± 0.5

! I prodotti e le caratteristiche possono cambiare senza preavviso.
The products and their features may change without notice.

MINI-DIN