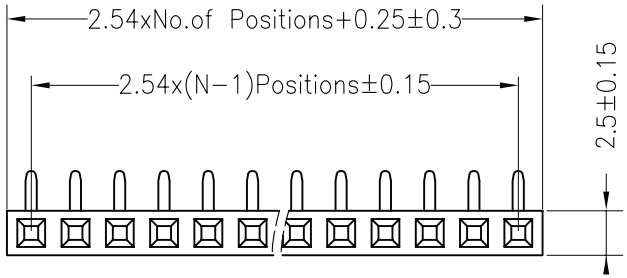

Recommended P.C.B Layout(Top Side)
(PCB BOARD TOLERANCE±0.05)

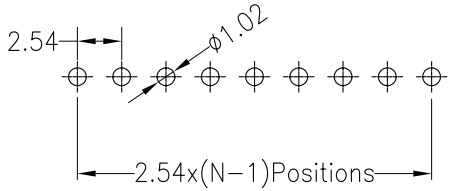

SPECIFICATIONS
Rated Current:3.0AMP
Contact Resistance:20mΩ Max
Withstand Voltage:1000V AC/DC
Insulation Resistance:1000MΩ Min
Operation Temperature:−40°c to +105°c

Contact Material:Brass
Contact Plating:Au or Sn Over Ni
Insulator Material:Polyester(UL94V−0)
Standard: PA6T
Max.Processing Temp: 230°C for 30−60 seconds
(260°C for 10 seconds)

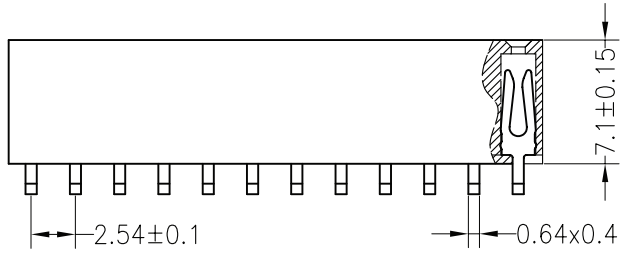

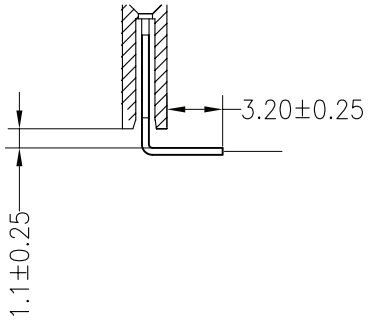

General description of ordering code

FAMILY	PITCH		N° ROWS	N° PIN P.R.	VERSION	CLIP PLATING	HEIGHT	OPTION	PACKAGE
FH	254	-	1	XX	R [right angle]	F [flash gold]	071	00 [Standard]	T [tube]
						G [gold 10u]			V [tray-]

euro-conn

RoHS Compliant Lead Free

c UL us FILE N. E356435

UNITS: mm	SHEET SIZE: ISO A4	SCALE:	
> 0 ~ 3	> 3 ~ 18	> 18 ~ 50	> 50 ~ 120
± 0.12	± 0.15	± 0.3	± 0.5

First angle projection

FEMALE HEADER